TDS / TDSH / TDSL Series

Relay Output, Single Shot Time Delay Relay

Description

The TDS series combines accurate digital circuitry with isolated, 8 A rated, DPDT or SPDT relay contacts in an 8-pin or 11-pin plug-in package. The TDS series features DIP switch selectable time delays ranging from 0.1s to 10,230 s in three ranges. The TDS series is the product of choice for custom control panel and OEM designers.

Operation (Single Shot)

Input voltage must be applied to the input before and during timing. Upon momentary or maintained closure of the initiate switch (leading edge triggered), the output relay energizes for a measured interval of time. At the end of the delay, the output de-energizes. Opening or reclosing the initiate switch during timing has no affect on the time delay. The output will energize if the initiate switch is closed when input voltage is applied.

Reset: Reset occurs when the time delay is complete and the initiate switch is opened. Loss of input voltage resets the time delay and output.

Wiring Diagram

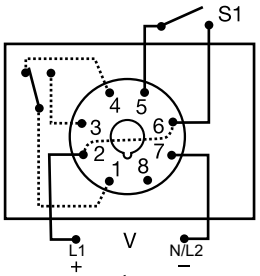

8-PIN OCTAL SPDT

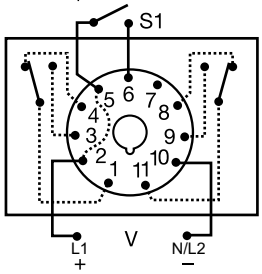

S1 = Initiate Switch
Relay contacts are isolated.

11-PIN DPDT

Features & Benefits

FEATURES	BENEFITS
3 time ranges available (0.1 s to 2.8 h)	Makes it versatile for use in many applications
Microcontroller based	Repeat Accuracy + / - 0.1 %; Setting Accuracy + / - 2 %
LED indication (select models)	Provides visual indication of relay status
DIP switch adjustment	Provides first time setting accuracy
Isolated output contacts	Allows control of loads with independent voltage sources

Ordering Information

MODEL	INPUT VOLTAGE	DELAY RANGE (SEC)	LED	PLUG TYPE/OUTPUT FORM
TDS120AL	120 V ac	1–1023 in 1 s increments	X	Octal (8-pin) plug, SPDT
TDS120ALD	120 V ac	1–1023 in 1 s increments	X	11-pin plug, DPDT
TDS12D	12 V dc	1–1023 in 1 s increments		Octal (8-pin) plug, SPDT
TDS230AL	230 V ac	1–1023 in 1 s increments	X	Octal (8-pin) plug, SPDT
TDS24AL	24 V ac	1–1023 in 1 s increments	X	Octal (8-pin) plug, SPDT
TDSH120AL	120 V ac	10–10230 in 10 s increments	X	Octal (8-pin) plug, SPDT
TDSL120AL	120 V ac	0.1–102.3 in 0.1 s increments	X	Octal (8-pin) plug, SPDT

© 2021 Littelfuse, Inc.

Accessories

OT08PC 8-pin Octal Socket for UL listing*
8-pin 35 mm DIN-rail or surface mount. Rated at 10 A @ 600 V ac. Surface mounted with two #6 screws or snaps onto a 35 mm DIN rail.

OT11PC Octal Socket for UL listing*
11-pin surface & DIN rail mountable. Rated for 10 A @ 300 V ac

P1011-6 Octal Socket for UL listing*
8-pin surface mount socket with binder head screw terminals. Rated 10 A @ 600 V ac.

Digi-Set Binary Switch Operation

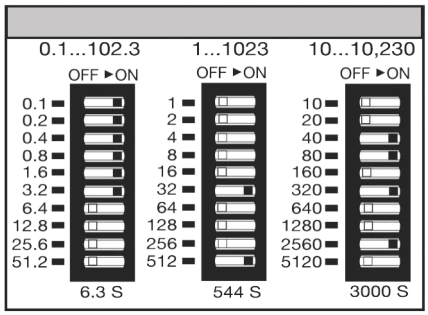

Function Diagram

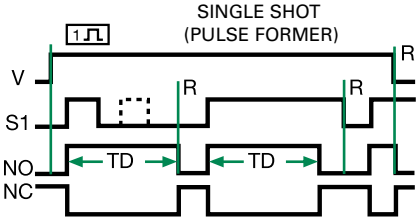

V = Voltage
S1 = Initiate Switch
NO = Normally Open Contact
NC = Normally Closed Contact
TD = Time Delay
R = Reset

Specifications

Time Delay	
Type	Digital integrated circuitry
Range	0.1–102.3 s in 0.1 s increments 1–1023 s in 1 s increments 10–10,230 s in 10 s increments
Repeat Accuracy	±0.1 %
Setting Accuracy	±2 %
Reset Time	≤ 150 ms
Time Delay vs Temp. & Voltage	±5 %
Indicator	LED glows during timing; relay is energized
Initiate Time	≤ 60 ms
Input	
Voltage	12 V dc; 24, 120, or 230 V ac
Tolerance	
12 V dc & 24 V	-15 %–20 %
120 & 230 V ac	-20 %–10 %
AC Line Frequency	50/60 Hz
Power Consumption	≤ 3.25W
Output	
Type	Electromechanical relay
Form	SPDT or DPDT
Rating	8 A resistive @ 120/240 V ac 1/3 hp @ 120/240 V ac
Life	Mechanical - 1 x 10^7; Electrical - 1 x 10^6
Protection	
Isolation Voltage	≥ 1500 V rms input to output
Polarity	Dc units are reverse polarity protected
Mechanical	
Mounting	Plug-in socket
Termination	Octal 8-pin plug-in or 11-pin plug-in
Dimensions	**H** 44.45 mm (1.75”); **W** 60.33 mm (2.38”); **D** (with socket) 104.78 mm (4.13”)
Environmental	
Operating/Storage Temperature	-20 °C to 65 °C/-30 °C to 85 °C
Weight	≅ 4 oz (113 g)
Safety Marks	
UL (socket required)*	UL 508 (E57310)

*UL Listed when used with Part Number OT08-PC, RB08-PC, OT11-PC, or RB11-PC manufactured by Custom Connector Corp.

Note: Manufacturer's recommended screw terminal torque for the OT Series sockets is 12 in-lbs.

Disclaimer Notice – Information furnished is believed to be accurate and reliable. However, users should independently evaluate the suitability of and test each product selected for their own applications. Littelfuse products are not designed for, and may not be used in, all applications. Read complete Disclaimer Notice at **www.littelfuse.com/product-disclaimer.**

© 2021 Littelfuse, Inc.